SR-WG115 Series

HARMONY COLLECTION
BY SCOTT ARCHITECTURAL LIGHTING



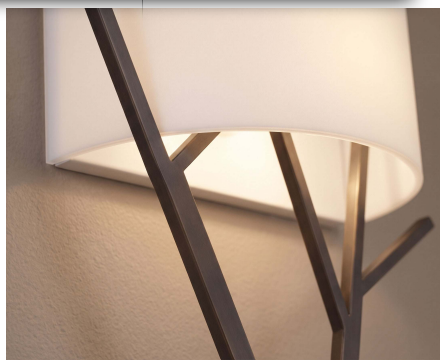

PART NUMBER
SR-WG115- ____- ____- ____

Model No.
SR-WG115

Lamp Base
2CD (2) Candelabra Base

Watts
08

Finish
PT Powder Coated*
ORB Oil Rubbed Bronze
AB Antique Brass
*(Specify Color Code from the list of Powder Coating Finishes)
**(Consult Factory for more options)

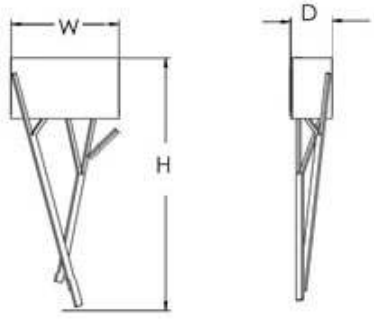

DIMENSIONS

BASE MODEL NO.	W	D	H
SR-WG115	10″	3.9″	27.3″

SPECIFICATIONS

Voltage: 120V – Dimming is a function of the lamp (by others). For alternate voltages or dimming options, please consult the factory.
Mounting: Mounts to all Standard Electrical Junction Boxes (by others) With Hardware Provided.

FEATURES

- Opal Matte Acrylic Half Shade
- Lamp Based Design for Flexible Use in a Variety of Applications

APPLICATIONS

- Corridor
- Common Areas

Don't see an option you are looking for? Contact your agent to request a modification.

www.ScottArchLighting.com | Tel (707) 864-2172 | Fax (707) 864-2182
© Copyright 2026 Scott Architectural Lighting. All Rights Reserved.