SR-WC149 Series

HARMONY COLLECTION
BY SCOTT ARCHITECTURAL LIGHTING



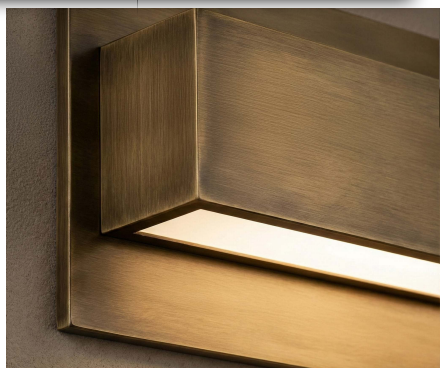

PART NUMBER

SR-WC149- ____- ____- ____- ____- ____

Model No.	LED or Lamp Base	Watts	CCT (If Applicable)	Finish	Diffuser
SR-WC149	L LED	16	27K 30K	PT Powder Coated* PC Polished Chrome SN Satin Nickel AB Antique Brass	OMA Opal Matte Acrylic

*(Specify Color Code from the list of Powder Coating Finishes)
**(Consult Factory for more options)

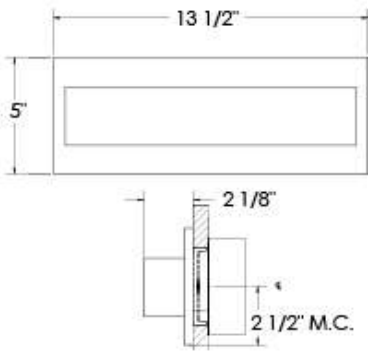

DIMENSIONS

BASE MODEL NO.	H	W	D	MC
SR-WC149	5″	13 1/2″	2 1/8″	2 1/2″

SPECIFICATIONS

Dimming: ELV Dimming at 120V ONLY
Mounting: Mounts to all Standard Electrical Junction Boxes (by others) With Hardware Provided.

FEATURES

- With Field Replaceable LED Module
- Acrylic Diffuser
- ADA Compliant
- ELV Dimming

APPLICATIONS

- Corridor
- Entry

Don't see an option you are looking for? Contact your agent to request a modification.

www.ScottArchLighting.com | Tel (707) 864-2172 | Fax (707) 864-2182
© Copyright 2026 Scott Architectural Lighting. All Rights Reserved.